DOSMATIC U.S.A./INTERNATIONAL, INC.
1230 Crowley Circle • Carrollton, Texas 75006 U.S.A.
Phone: (972) 245-9765 • Fax: (972) 245-9000
Toll Free: (800) 344-6767
www.dosmatic.com

ISO 9001:2000 Registered
Quality Management System

KITS AND PARTS PRICE LIST
SuperDos 20 - 2.5% (NPT = PN 113205, BSP = PN 113705)

Description of Kit	Part #	Manual Reference
Kit A – Wear Parts Kit (dosage piston and oring)	011850V	17, 44
Kit B – Wear Parts Kit (Kit A, & shaft)	011945V	17, 44, 51
Kit C – Wear Parts Kit (Kit A, inner cylinder and o-ring)	011850CV	7, 17, 44, 64
Kit D – Suction Tube Fitting Assy (poppet, nut, washer, o-ring, spring, fitting)	011463V	10, 11, 12, 13, 71, 80
Kit E – Wear Parts Kit (Kits C & D, shaft, pin, gasket)	011833PV	7, 10, 11, 12, 13, 16, 17, 44, 51, 64, 71, 80
Kit F – Lower End Cylinder Kit (inner & outer cylinder, ratio adjuster, o-rings, retainer clip, pin, gasket)	011961V	7, 16, 61, 64, 65, 66, 67, 79
Kit G - Lower End Kit, complete (Kit E, outer cylinder, ratio adjuster, o-rings, retainer clips, pins, retainer, filter, solution tube)	011843PV	7, 10, 11, 12, 13, 15, 16, 17, 25, 27, 44, 51, 61, 64, 65, 66, 67, 71, 79, 80
Kit H – Motor Piston Assy (upper end kit)	011863	9
Kit M – Mounting Bracket Kit (mounting bracket, 4 hex caps & nuts)	011432	56, 57, 58

Manual Reference	Part #	Description of Part	
1	011175	Upper Housing	
3	194605	Mixing Chamber Gasket	
7	194404P	Cylinder, inner	
10	194418H	Spring	
11	194417	Fitting, suction tube, 1/4"	
12	212120V	O-ring	
13	011453A	Poppet, check w/washer	
14	212005VH	O-ring	
15	194004	Seal retainer, o-ring	
16	010016S	Gasket, inlet/outlet and cylinder	
17	212005VH	O-ring	
20	212116V	O-ring, buna, at top, under bleeder	
21	194508	Shaft, Actuator Round	
25	010025	Suction tube, ¼" x 5'	
27	011017	Filter, for suction tube, ¼" ID	
33	011155VH	Poppet arm for upper assembly	
34	193641	Cotter Ring	
40	011031	Lower Housing NPT	
40	011031B	Lower Housing BSP	
44	010044P	Dosage Piston	
51	194301F	Shaft, with ears	
61	194406P	Ratio adjustment sleeve	
64	212017V	O-ring, inner cylinder, lower end	
65	194310D	Pin, upper interlock	
66	212025V	O-ring, outer cylinder, lower end	
67	194407P	Cylinder, outer	
71	194414	Nut, suction tube fitting	
79	194410SS	Pin, narrow interlock	
80	194415	Twistlock	
85	194612	Pin on/off	
86	194550	Cap on/off	
87	194516	Handle on/off	

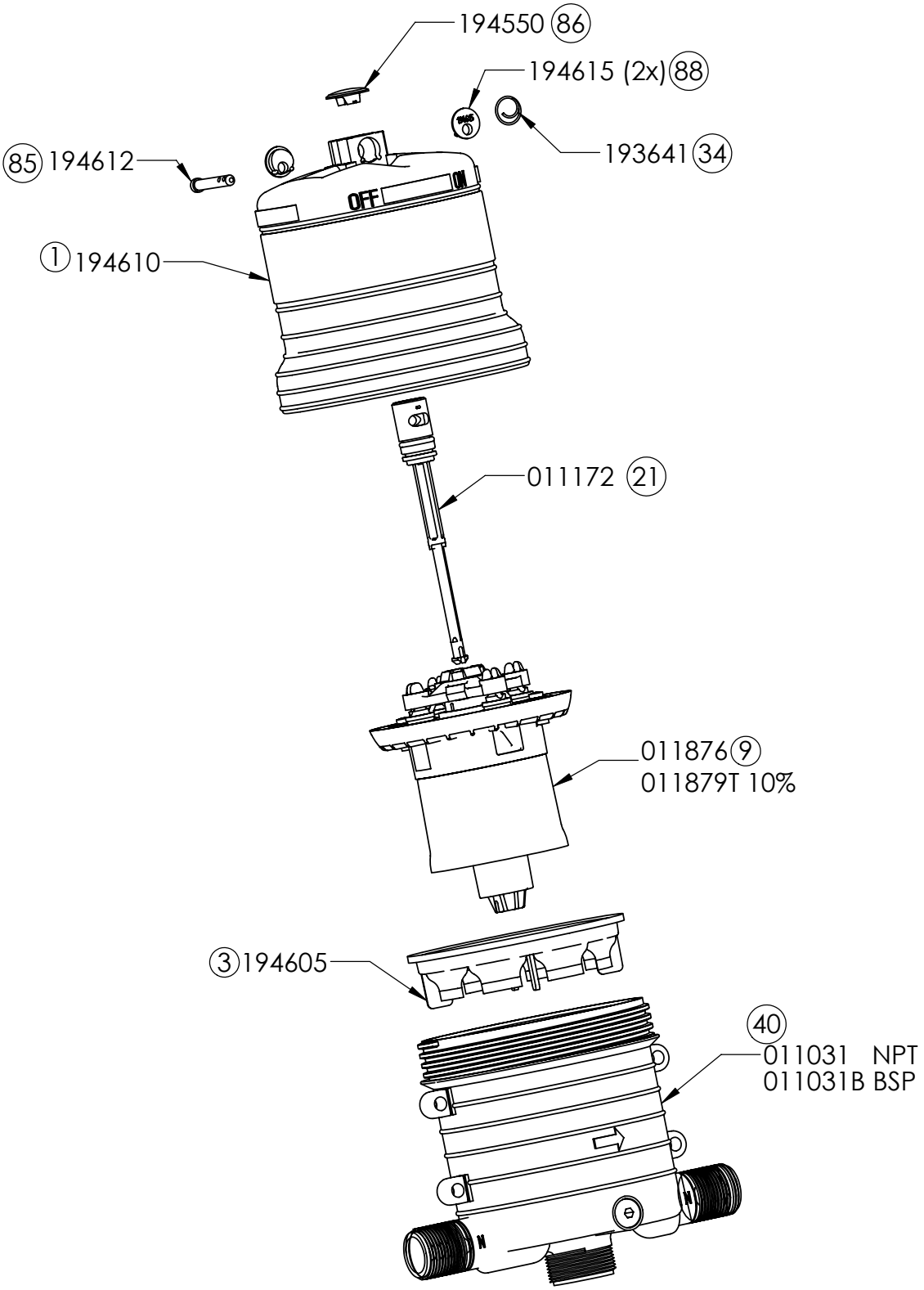
194550 86
194615 (2x) 88
193641 34
85 194612
OFF
ON
1 194610
011172 21
011876 9
011879T 10%
3 194605
40
011031 NPT
011031B BSP

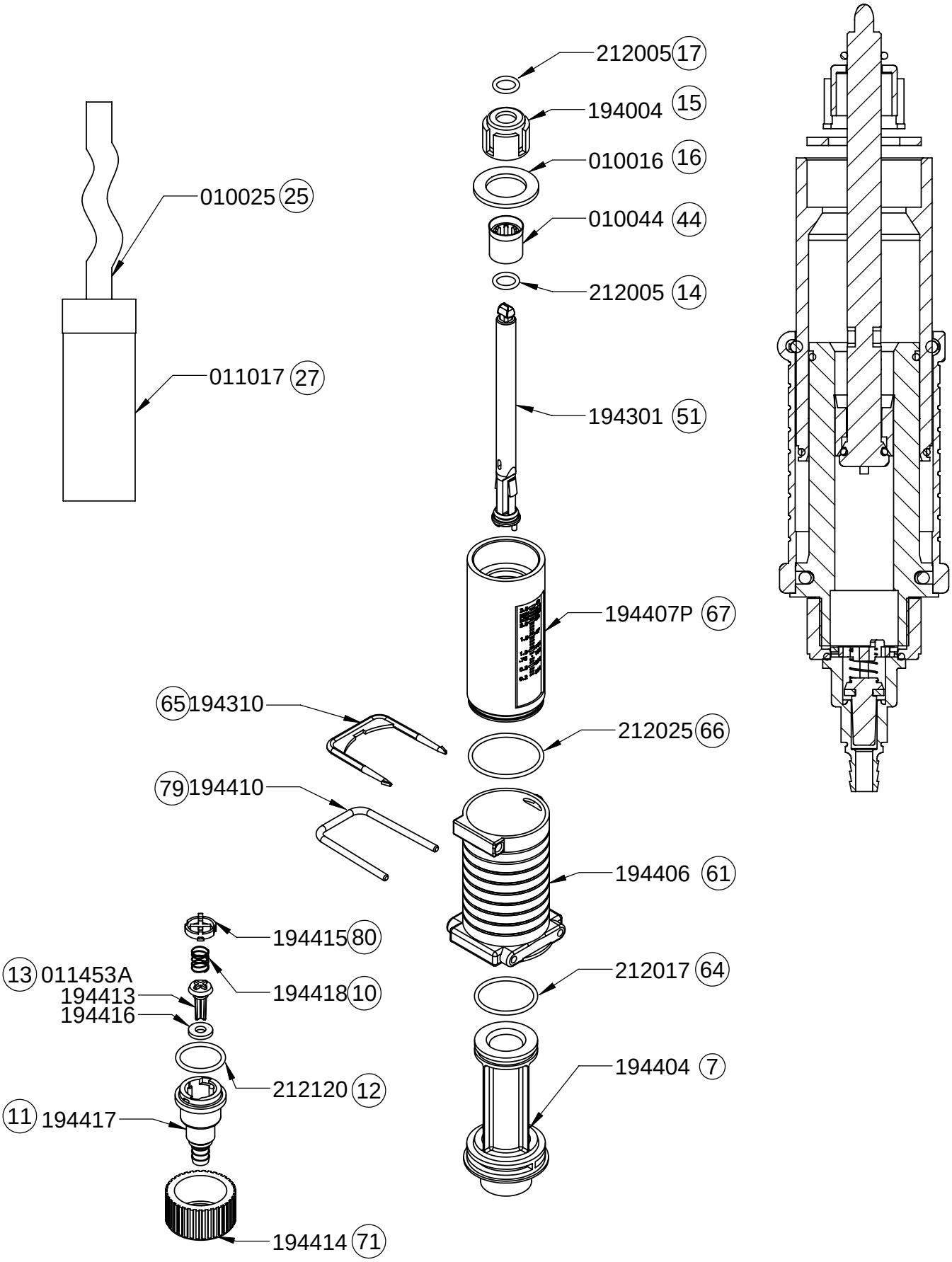
212005 17
194004 15
010016 16
010044 44
212005 14
010025 25
011017 27
194301 51
194407P 67
65 194310
212025 66
79 194410
194406 61
194415 80
13 011453A
194413
194416
194418 10
212017 64
212120 12
194404 7
11 194417
194414 71